# Industrial Router Pro Series

# UR32

Quick Start Guide

## Safety Precautions

Milesight will not shoulder responsibility for any loss or damage resulting from not following the instructions of this operating guide.

- The device must not be modified in any way.
- Do not place the device close to objects with naked flames.
- Do not place the device where the temperature is below/above the operating range.
- Do not power on the device or connect it to other electrical device when installing.
- Check lightning and water protection when used outdoors.
- Do not connect or power the equipment using cables that have been damaged.

### Related Documents

This Start Guide only explains the installation of Milesight UR32 router. For more functionality and advanced settings, please refer to the relevant documents as below.

| Document | Description |
|---|---|
| UR32 Datasheet | Datasheet for UR32 industrial cellular router. |
| UR32 User Guide | Users could refer to the guide for instruction on how to log in the web GUI, and how to configure all the settings. |

The related documents are available on Milesight website: https://www.milesight-iot.com

### Declaration of Conformity

UR32 are in conformity with the essential requirements and other relevant provisions of the CE, FCC, and RoHS.

**© 2011-2026 Xiamen Milesight IoT Co., Ltd.**

**All rights reserved.**

All information in this guide is protected by copyright law. Whereby, no organization or individual shall copy or reproduce the whole or part of this user guide by any means without written authorization from Xiamen Milesight IoT Co., Ltd.

For assistance, please contact
Milesight technical support:
Email: iot.support@milesight.com
Support Portal: support.milesight-iot.com
Tel: 86-592-5085280
Fax: 86-592-5023065
Address: Building C09, Software Park III, Xiamen 361024, China

## Revision History

| Date | Doc Version | Description |
|---|---|---|
| Apr. 26, 2019 | V 1.0 | Initial version |
| May 11, 2020 | V 1.1 | Web interfaces upgrade |
| Nov. 25, 2020 | V 2.0 | Layout Replace |
| Dec. 1, 2021 | V 2.1 | 1. DI matches to GND<br>2. Update cellular pictures |
| Oct. 31, 2022 | V 2.2 | 1. Delete Ethernet cable<br>2. Loggin page update |
| Apr. 30, 2026 | V 2.3 | Add an optional DIN mounting bracket kit and side DIN rail mounting method. |

# Contents

1. Packing List ..... 5
2. Hardware Introduction ..... 6
    2.1 Overview ..... 6
    2.2 Dimensions (mm) ..... 6
    2.3 Serial & IO & Power Pinouts ..... 7
    2.4 LED Indicators ..... 7
    2.5 Reset Button ..... 8
    2.6 Ethernet Port Indicator ..... 8
3. Hardware Installation ..... 9
    3.1 SIM Card/Micro SD Card Installation ..... 9
    3.2 Antenna Installation ..... 9
    3.3 Router Installation ..... 9
        3.3.1 Wall Mounting (Measured in mm) ..... 9
        3.3.2 Back DIN Rail Mounting (Measured in mm) ..... 10
        3.3.3 Side DIN Rail Mounting (Optional) ..... 11
4. Log in the Web GUI ..... 12
5. Network Configuration ..... 14
    5.1 Ethernet WAN Configuration ..... 14
    5.2 Cellular Connection Configuration ..... 15

# 1. Packing List

Before you begin to install the UR32 router, please check the package contents to verify that you have received the items below.

1 × UR32

1 × Power Adapter

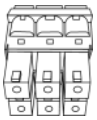

1 × 6-Pin Pluggable Terminal

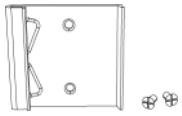

1 × DIN Rail Kit

4 × Wall Mounting Kits

2 × Magnetic Cellular Antennas

1 × Warranty Card

1 × Quick Start Guide

1 × Wi-Fi Antenna (Wi-Fi Version Only)

1 × GPS Antenna (GPS Version Only)

2 × Stubby Cellular Antennas (Optional)

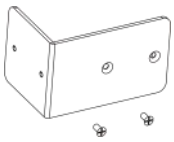

1 × DIN Mounting Bracket Kit (Optional)

**If any of the above items is missing or damaged, please contact your sales representative.**

# 2. Hardware Introduction

## 2.1 Overview

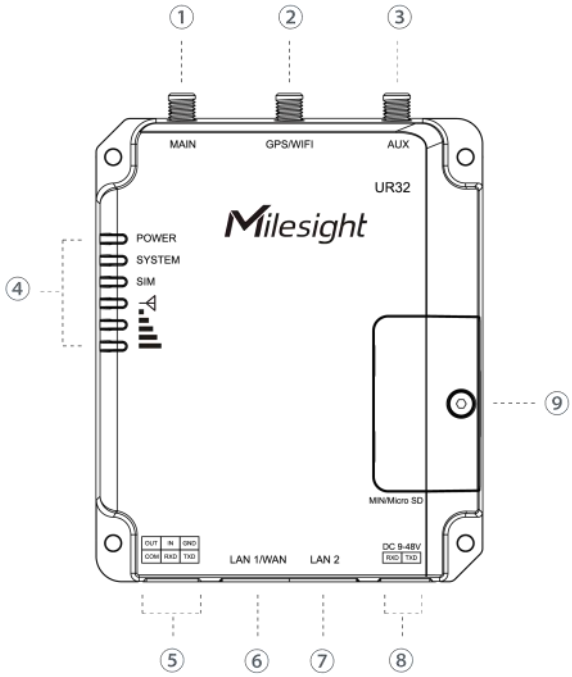


① Main Cellular Antenna Connector
② GPS/WIFI Antenna Connector
③ AUX Cellular Antenna
④ LED Indicator Area
POWER: Power Indicator
SYSTEM: Status Indicator
SIM : Status Indicator
: Signal Strength Indicator
⑤ Serial Port & I/O
⑥ Ethernet LAN1/WAN Port
⑦ Ethernet LAN2 Port
⑧ Power Connector
⑨ SIM and Reset Button Holder

## 2.2 Dimensions (mm)

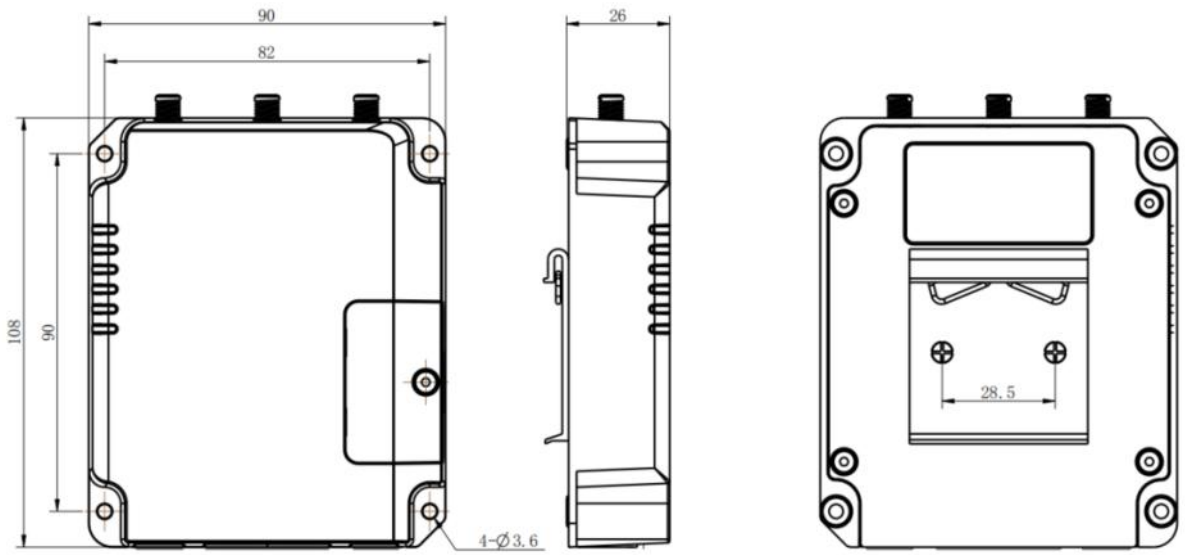

## 2.3 Serial & IO & Power Pinouts

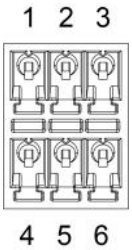


| PIN | RS232 /RS485* | DI | DO | Description |
|---|---|---|---|---|
| 1 | --- | --- | OUT | Digital Output |
| 2 | --- | IN | --- | Digital Input |
| 3 | GND | GND | --- | Ground |
| 4 | --- | | COM | Common Ground |
| 5 | RXD/B | --- | --- | Receive Data |
| 6 | TXD/A | --- | --- | Transmit Data |

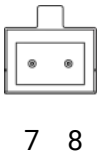


| PIN | Description | Wire Color |
|---|---|---|
| 7 | Positive | Red |
| 8 | Negative | Black |

*: Only for -485 model.

## 2.4 LED Indicators

| LED | Indication | Status | Description |
|---|---|---|---|
| POWER | Power Status | Off | The power is switched off |
| | | On | The power is switched on |
| SYSTEM | System Status | Green Light | Static: Start-up |
| | | | Blinking slowly: the system is running properly |
| | | Red Light | The system goes wrong |
| SIM | SIM Card Status | Off | SIM1 or SIM2 is registering or fails to register (or there are no SIM cards inserted) |
| | | Green Light | Blinking slowly: SIM1 has been registered and is ready for dial-up |
| | | | Blinking rapidly: SIM1 has been registered and is dialing up now |
| | | | Static: SIM1 has been registered and dialed up successfully |
| | | Orange Light | Blinking slowly: SIM2 has been registered and is ready for dial-up |
| | | | Blinking rapidly: SIM2 has been registered and is dialing up now |
| | | | Static: SIM2 has been registered and dialed up successfully |
| Signal | Signal 1/2/3 | Off | No signal |

| | | | |
|---|---|---|---|
| Strength | | Green Light | Static/Off/Off: weak signals with 1-10 ASU (please check if the antenna is installed correctly, or move the antenna to a suitable location to get better signal) |
| | | | Static/Static/Off: normal signals with 11-20 ASU (average signal strength) |
| | | | Static/Static/Static: strong signals with 21-31 ASU (signal is good) |

## 2.5 Reset Button

Reset button is under the SIM slots.

| Function | Description | |
|---|---|---|
| | SYSTEM LED | Action |
| Reset | Blinking | Press and hold the reset button for more than 5 seconds. |
| | Static Green → Rapidly Blinking | Release the button and wait. |
| | Off → Blinking | The router is now reset to factory defaults. |

## 2.6 Ethernet Port Indicator

| Indicator | Status | Description |
|---|---|---|
| Link Indicator (Orange) | On | Connected |
| | Blinking | Transmitting data |
| | Off | Disconnected |

# 3. Hardware Installation

## Environmental Requirements

- Power Input: 9-48 VDC (48 VDC is needed for PoE output)
- Power Consumption: Typical 1.9 W (Max 2.4 W)
- Operating Temperature: -40°C to 70°C (-40°F -158°F)
- Relative Humidity: 0% to 95% (non-condensing) at 25°C/77°F

## 3.1 SIM Card/Micro SD Card Installation

A. Unscrew the cover of the SIM card then take it off.

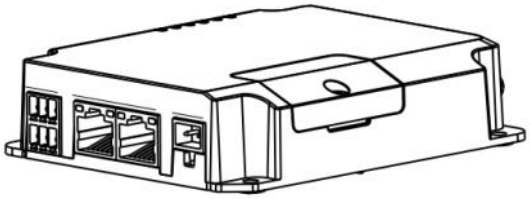

B. Put SIM card/Micro SD into the slot and screw it up.

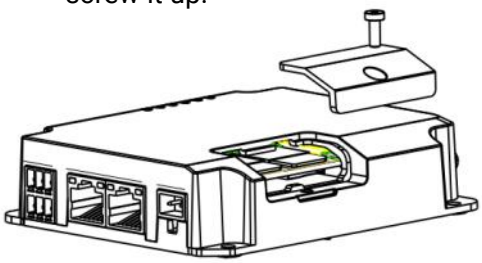

Note: UR32 does not support hot plugging (also called hot swapping). please turn off the power before you insert or take off cards.

## 3.2 Antenna Installation

Rotate the antenna into the antenna connector accordingly.
The external antenna should be installed vertically always on a site with a good signal.

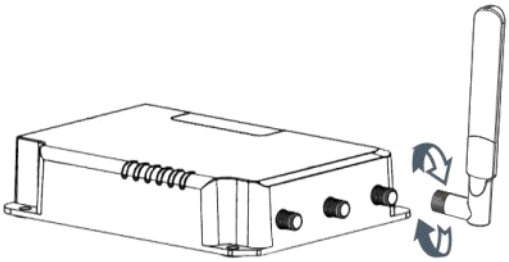

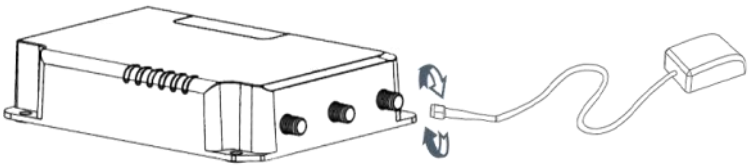

## 3.3 Router Installation

The router can be placed on a desktop or mounted to a wall or a DIN rail.

### 3.3.1 Wall Mounting (Measured in mm)

**Steps:**

1. Use 4 pcs of M3 × 6 flat head Phillips screws to fix the router on the wall.

**Recommended torque for mounting is 1.0 N·m, and the maximum allowed is 1.2 N·m.**

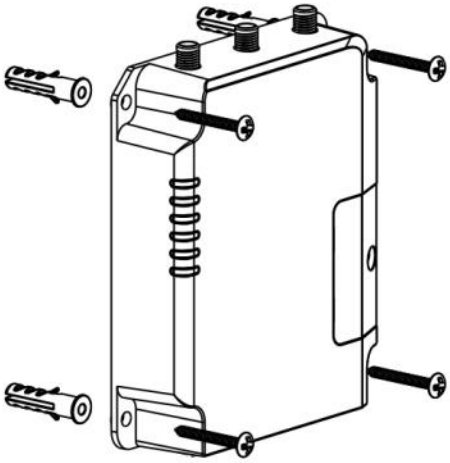

### 3.3.2 Back DIN Rail Mounting (Measured in mm)

**Steps:**

1. Use 2 pcs of M3 × 6 flat head Phillips screws to fix the mount clip to the back panel of the router.

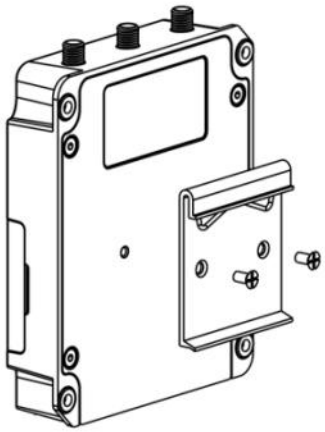

2. Hang the device to the DIN rail. The width of DIN rail is 3.5 cm.

**Recommended torque for mounting is 1.0 N·m, and the maximum allowed is 1.2 N·m.**

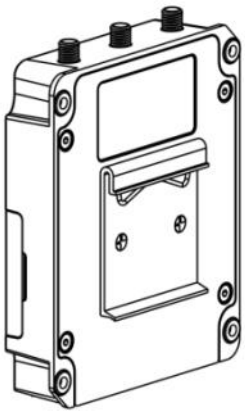

### 3.3.3 Side DIN Rail Mounting (Optional)

With an optional DIN mounting bracket, the router can be mounted on the side instead of the back panel, reducing the contact area on the DIN rail for better suitability in space- limited installations.

**Steps:**

1. Use 2 Phillips screws to fix the DIN mounting bracket onto the router. Ensure the shorter side of the bracket is placed near the SIM card slot as shown.

**Note**: Ensure that the SIM/SD card has been properly installed. For details, refer to Section 3.1.

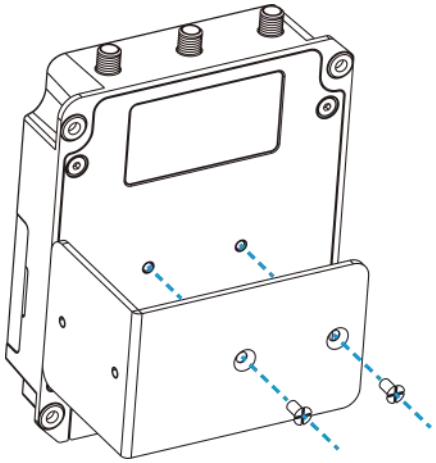

2. Use 2 Phillips screws to attach the mounting clip (DIN rail kit) to the bracket.

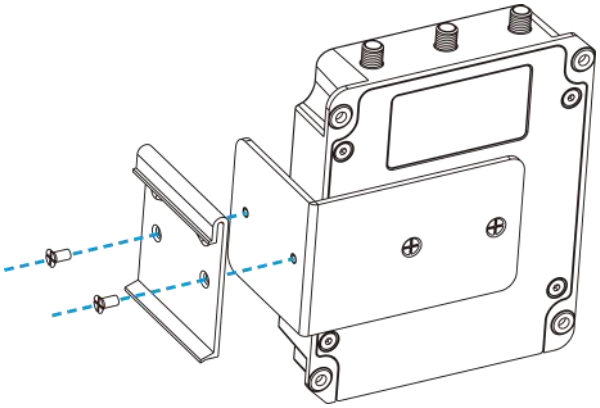

3. Hang the assembled device onto the DIN rail. The width of the DIN rail is 3.5 cm.

**Recommended torque for mounting is 1.0 N·m, and the maximum allowed is 1.2 N·m.**

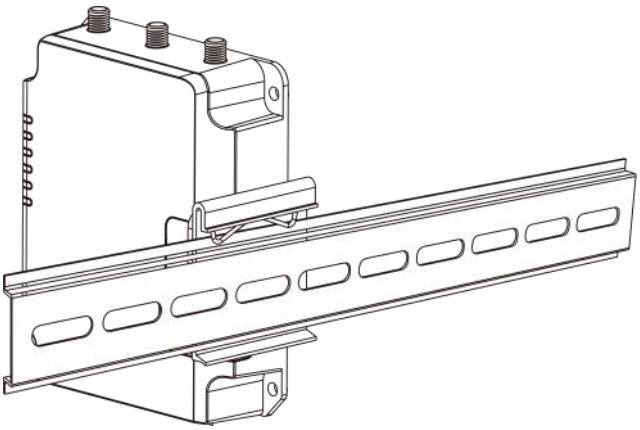

# 4. Log in the Web GUI

Please connect PC to LAN port of UR32 router. PC can obtain an IP address, or you can configure a static IP address manually. The following steps are based on Windows 10 operating system for your reference.

IP Address: **192.168.1.1**

Username: **admin**

Password: **password**

A. Go to "Control Panel" → "Network and Internet" → "Network and Sharing Center", then click "Ethernet" (May have different names).

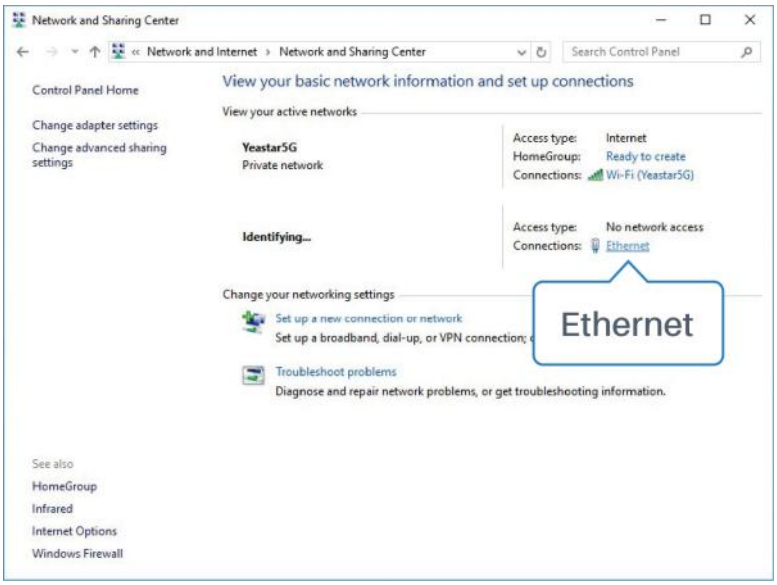


B. Go to "Properties" → "Internet Protocol Version 4(TCP/IPv4) ", select "Obtain an IP address automatically" or "Use the following IP address", then assign a static IP manually within the same subnet of the device.

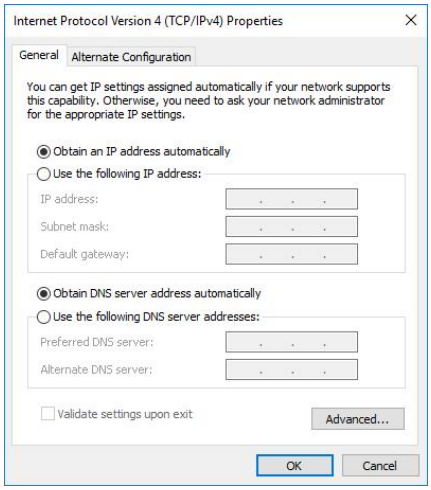


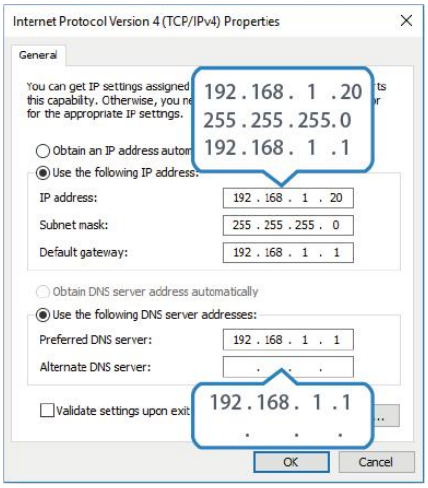


C. Open a Web browser on your PC (Chrome is recommended), type in the IP address **192.168.1.1** to access the web GUI.

D. Enter the username, password, and click "Login".

**If you enter the username or password incorrectly more than 5 times, the login page will be locked for 10 minutes.**

E. When you login with the default username and password, you will be asked to modify the password. It's suggested that you change the password for the sake of security.

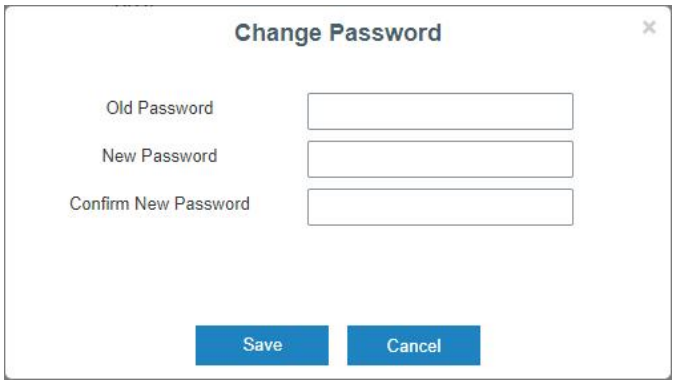


F. After you login the Web GUI, you can view system information and perform configuration on the router.

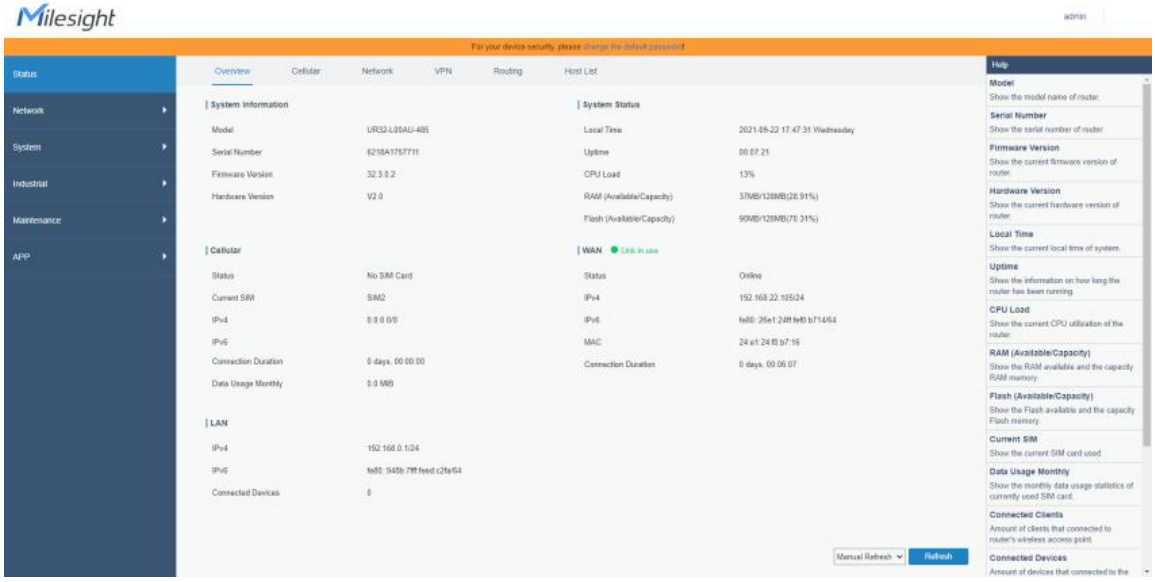

# 5. Network Configuration

This chapter explains how to connect UR32 to network via WAN connection or cellular.

## 5.1 Ethernet WAN Configuration

A. Go to “Network > Interface > Port” to change LAN1 to WAN port.

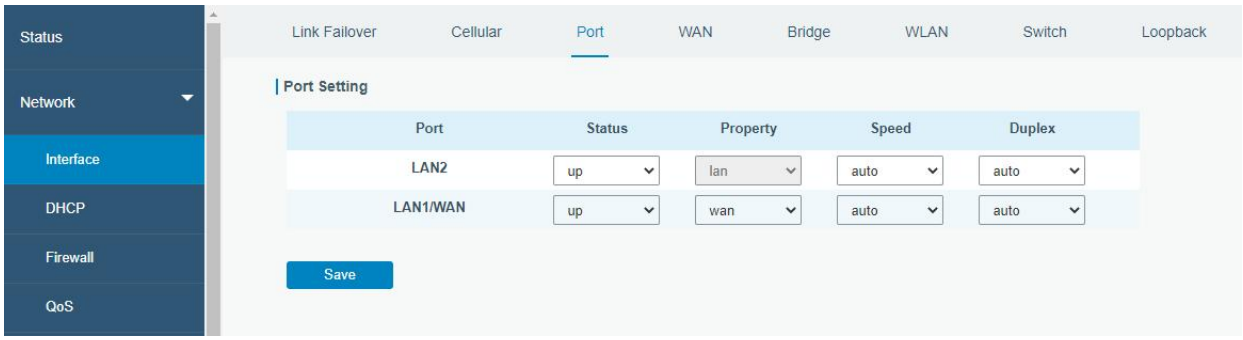


B. Go to “Network > Interface > WAN” to select connection type and configure WAN parameters, click “Save & Apply” button to make the changes take effect.

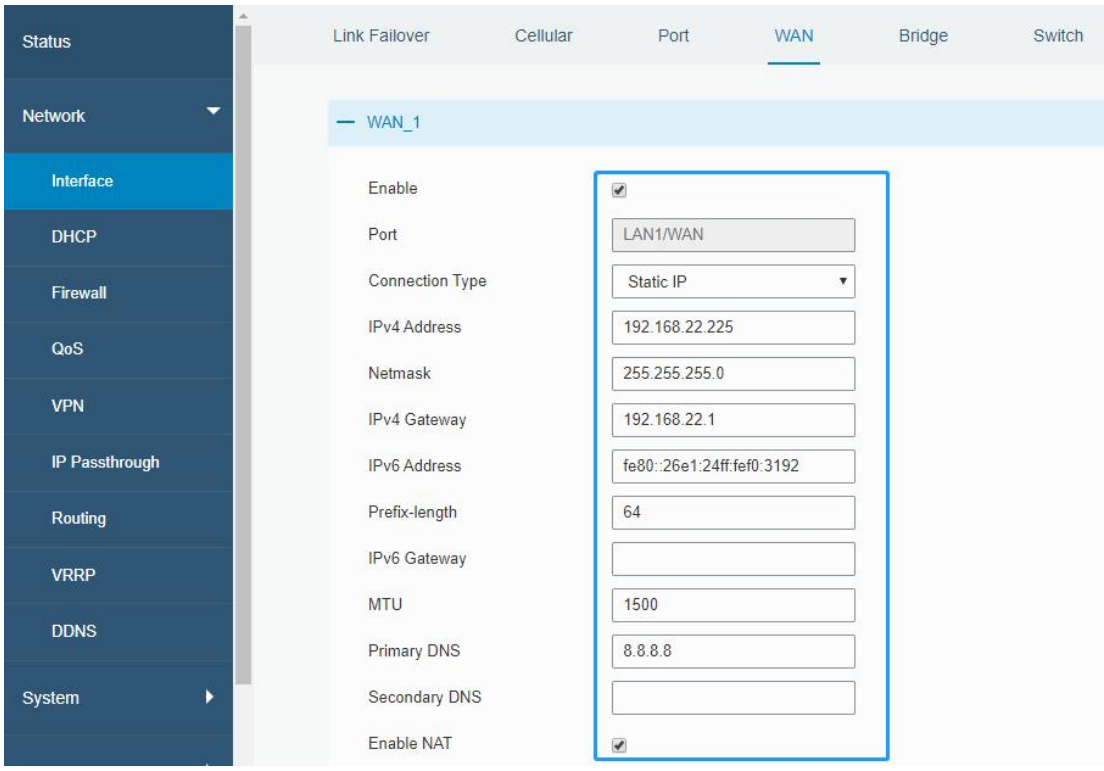


C. Connect WAN port to another network devices like modem.

D. Go to “Network > Interface > Link Failover” to rise the WAN priority to 1.

E. Open your preferred browser on PC, then type any available web address into address bar and see if it is able to visit Internet via UR32 router.

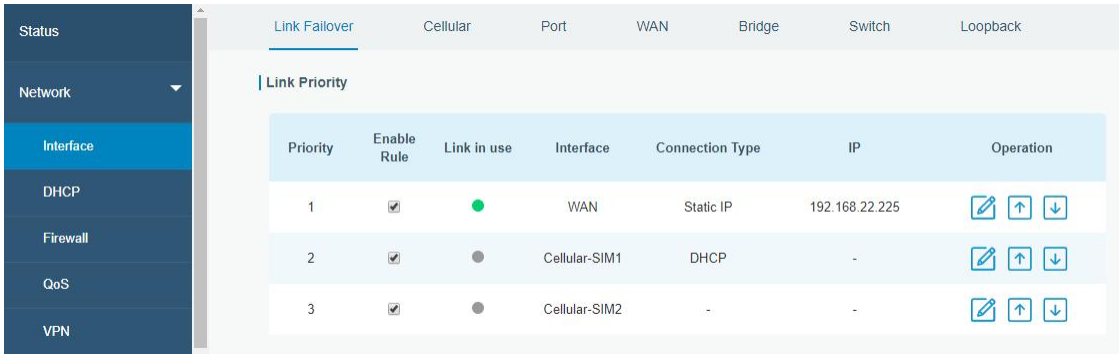


## 5.2 Cellular Connection Configuration

Take inserting SIM card into SIM1 slot as an example; please refer to the following detailed operations.

A. Go to “Network > Interface > Cellular > Cellular Setting” to configure APN, PIN code or other cellular info, click “Save” and “Apply” to save the configuration.

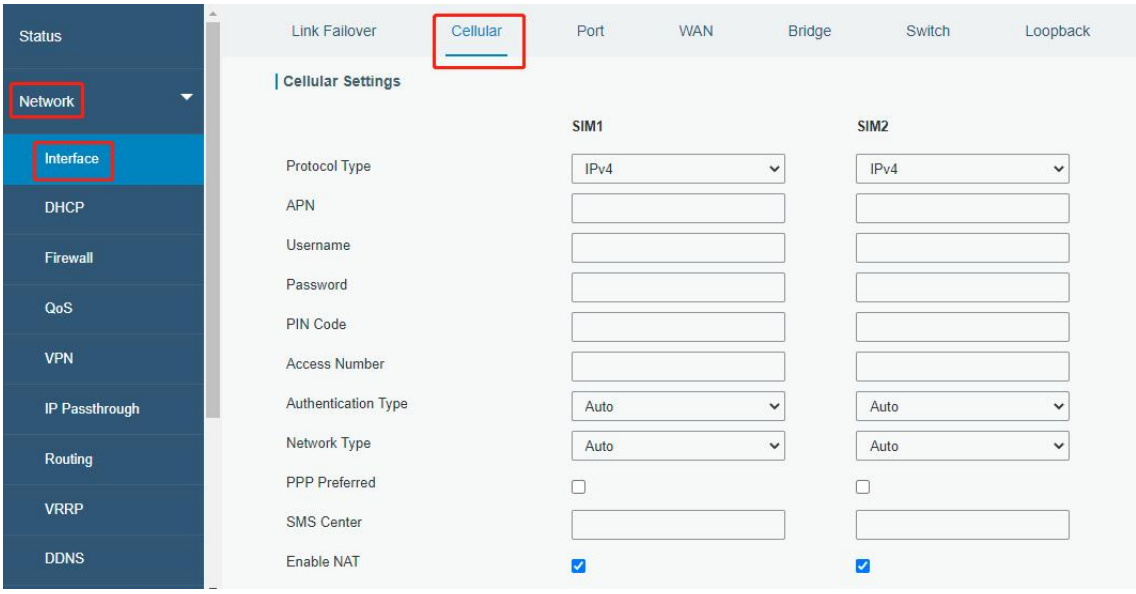


B. Go to “Network > Interface > Link Failover” to enable SIM1 and rise link priority of SIM1.

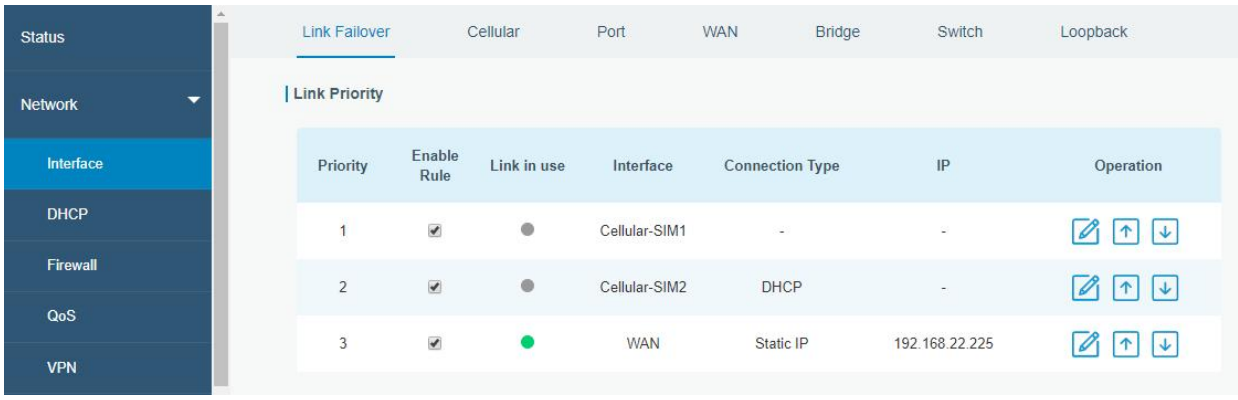


C. Click to configure ICMP ping detection information.

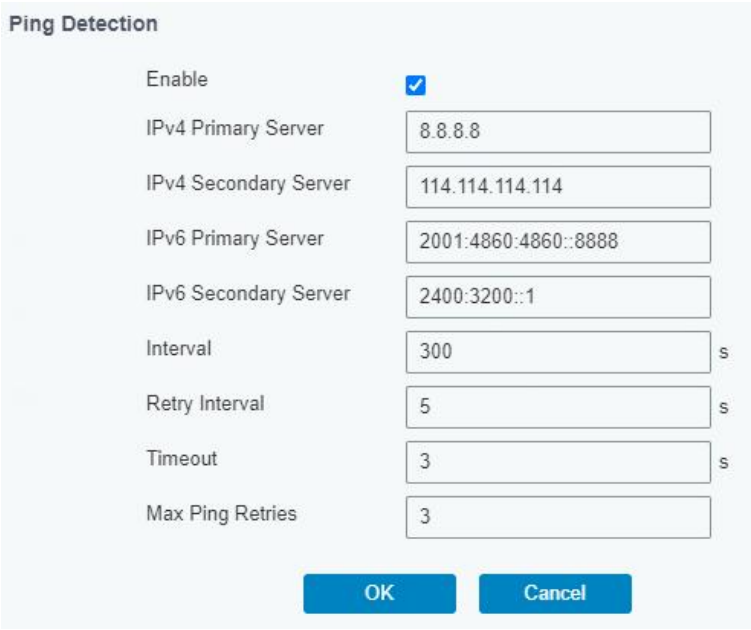


D. Click “Status > Cellular” to view the status of the cellular connection. If it shows “Connected”, it means SIM1 has dialed up successfully. On the other hand, you can check the status of SIM indicator. If it keeps on green light statically, it means SIM1 has dialed up successfully.

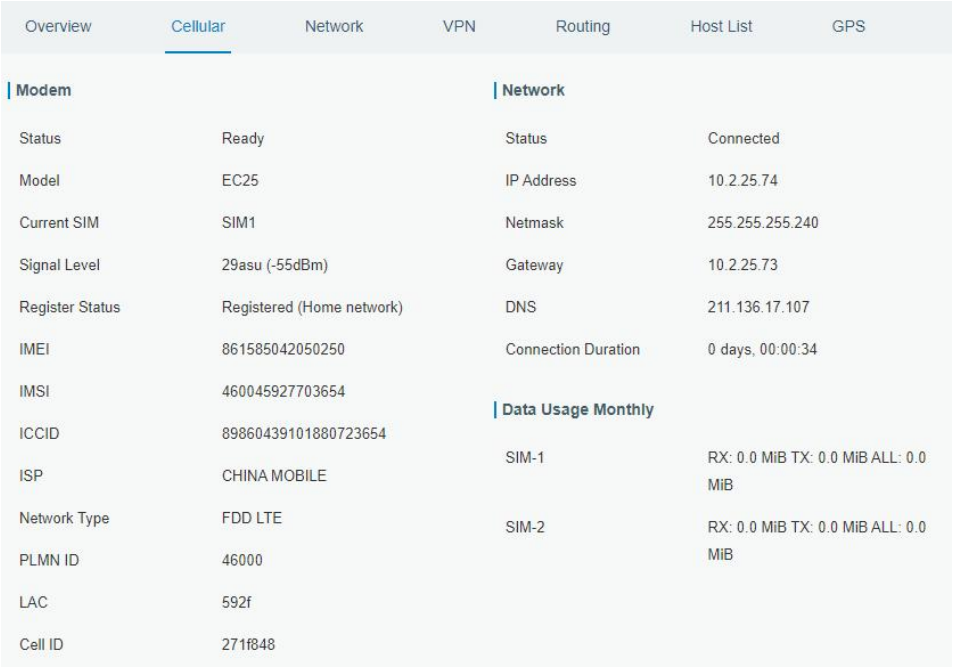


E. Open your preferred browser on PC, then type any available web address into address bar and see if it is able to visit Internet via UR32 router.

**[END]**